# IS SERIES (Bare Shaft Pump)

**Single-stage bare shaft end-suction pumps according to ISO 2858**

**60 Hz**

CORVEX
Pumps

## APPLICATION

Type IS pump is a single stage, single suction centrifugal pump. The pumps are used for pumping clean water or liquids that are similar to clean water in properties of physics and chemistry at temperature not more than 80℃. The pumps are suitable for industrial and municipal water supply and drainage. The pumps are also adaptable for agricultural irrigation.

The performance range: (at design point)
Speed: 2900r/min and 1450r/min
Suction diameter: 50-300mm
Capacity: 6.3-1000m3/h
Head: 5-125m

See fig 1, 2 and table 1.

The meaning of the symbols used in the pump type:

IS 80-65-160

- 160 — nominal diameter of impeller (mm)
- 65 — diameter of discharge nozzle (mm)
- 80 — diameter of suction nozzle (mm)
- IS — single stage, single suction clean water centrifugal pump

## DESCRIPTION OF CONSTRUCTURE

Type is pump is designed according to the performance and size specified in international standard ISO 2858. The major components are pump casing (1), wear ring (2), impeller nut (3), impeller (4), pump cover (5), shaft (6), bearing frame (7), coupling (8), packing gland (9), shaft sleeve (10), packing ring (11), packing (12). (See fig 3a.) When mech seal is used, the major components are pump casing (1), wear ring (2), impeller nut (3), impeller (4), pump cover (5), shaft (6), bearing frame (7), coupling (8), mech seal (9). (See fig 3b.)

Pump casing and cover of type IS pump are radial split at the backside of the impeller. This construction is convenient for maintenance. A spacer coupling permits to inspect the rotor without disturbing pump casing, suction and discharge pipeline and motor.

The pump volute including pump casing and pump cover constitute the working chamber. The rotating element consists of impeller, shaft and rolling bearing ect. The rotating element is carried by the rolling bearings mounted in the bearing frame. The radial and axial thrust are absorbed by the bearing.

In order to balance axial thrust, two wear rings are designed in front and at the back of the majority of the impeller, and the balance holes are on the back shroud of the impeller. The axial thrust of some pumps isn't big enough, so there is no wear ring and balance hole at the back of the impeller.

There are two types of the shaft seal. 1. Packing seal: there are packing gland (9), packing ring (11) and packing (12) to prevent air from in taking or the amount leakage. If there are balance holes in the impeller, cavity for soft packing connects to the impeller entrance. When liquid of the impeller entrance is at vacuum state, it is easy for air entraining along the surface of the shaft sleeve, so lantern ring is used in the stuffing box for sealing. If there is no balance hole in the impeller, the liquid

pressure at the back face of the impeller is higher than the atmosphere. There is no leakage, so the lantern ring can't use. The shaft sleeve is on the shaft to avoid excessive shaft wear, there is O-ring

between the shaft and the shaft sleeve to prevent air entrance or water leakage along the matched surface. 2. Mech seal: no leakage.

The motor through flexible coupling drives the pump. The rotating direction of pump is clockwise viewed from the motor side.

The dimension of suction and discharge flange sees the fig 4 and table 2.

The dimension of discharge cone-pipe sees the fig 5 and table 4.

The dimension of installation sees the fig 6, fig 7 and table 5.

IS STRUCTION DRAWING

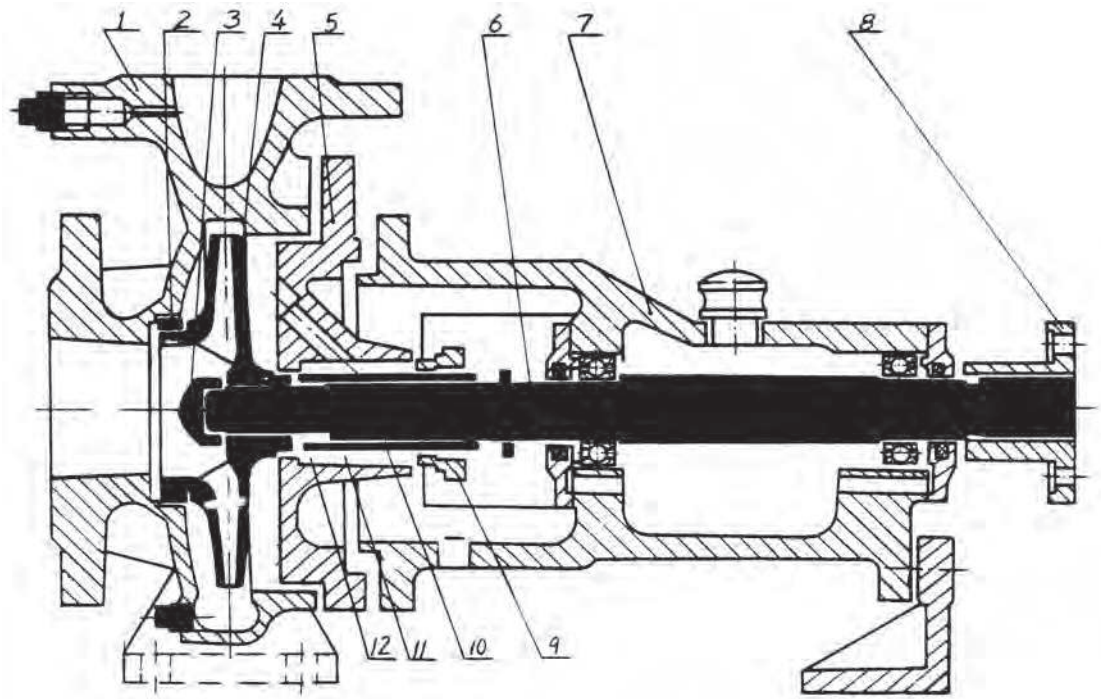


3a

| | | | | | |
|---|---|---|---|---|---|
| 1 | pump casing | 2 | wear ring | 3 | impeller nut |
| 4 | impeller | 5 | pump cover | 6 | shaft |
| 7 | bearing frame | 8 | coupling | 9 | packing gland |
| 10 | shaft sleeve | 11 | packing ring | 12 | packing |

## IS STRUCTION DRAWING

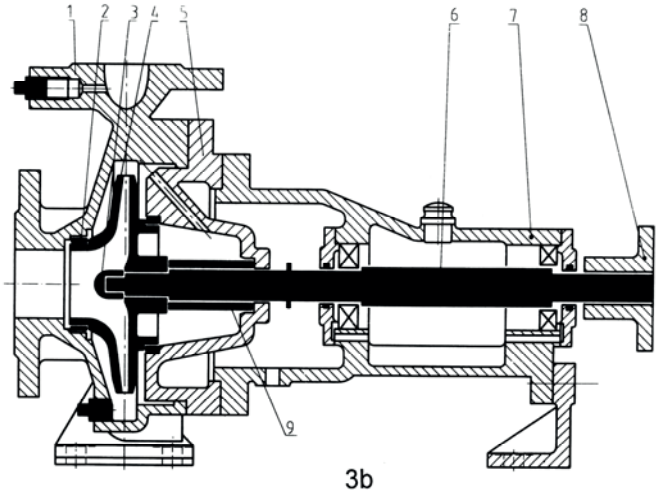


3b

| | | | | | | | | | | | | | | | | | |
|---|---|---|---|---|---|---|---|---|---|---|---|---|---|---|---|---|---|
| 1 | pump casing | 2 | wear ring | 3 | impeller nut | 4 | impeller | 5 | pump cover | 6 | shaft | 7 | bearing frame | 8 | coupling | 9 | mech seal |

## THE LENGTH OF VALVE AND SIPHON CONVERT INTO STRAIGHT PIPE

| Model | Referring fact | Memo |
|---|---|---|
| Sluice valve | 13 | Double time if not all open |
| Standard siphon | 25 | |
| Check valve | 100 | |
| Bottom valve | 100 | Double time if jammed |

Note: eg. The 100mm bottom valve convert into straight pipe is: 00*100=10000mm=10m.If the capacity is 8 l/s, to straight pipe every 100m the head loss 1.3m. so a 100mm bottom valve will loss 0.13m head when the capacity is 8 l/s.

## THE MAX CAPACITY IN DIFFERENT PIPE DIAMETER

| Diameter of pipe (mm) | The max capacity (L/S) | The max velocity of flow (m/S) | Diameter of pipe (mm) | The max capacity (L/S) | The max velocity of flow (m/S) |
|---|---|---|---|---|---|
| 25 | 1 | 2.04 | 125 | 30.0 | 2.44 |
| 38 | 2.5 | 1.69 | 150 | 43.0 | 2.45 |
| 50 | 4.17 | 2.12 | 175 | 60.0 | 2.49 |
| 65 | 6.67 | 2.01 | 200 | 83.3 | 2.69 |
| 75 | 10.0 | 2.26 | 250 | 133.3 | 2.72 |
| 100 | 18.4 | 2.33 | 300 | 192.0 | 2.71 |

Note: if beyond the limit, the loss of pipe will rised.


# CORVEX PUMPS

Address: 3701 NE, FL 33180 - USA
Phone : +1 786-401-5699 / +1 239-323-1128
**Sales Enquiries**: info@inducom.us, sales@inducom.us

**www.corvexpumps.com**




ISO 9001 ISO 14001